Testing of optical diagnostics for ion-beam-driven WDM experiments at NDCX

P. A. Ni, F. M. Bieniosek, M. Leitner, B. G. Logan, C. Weber and W. L. Waldron,
Lawrence Berkeley National Laboratory, University of California, Berkeley, California, USA

Testing of VISAR with "nail" gun

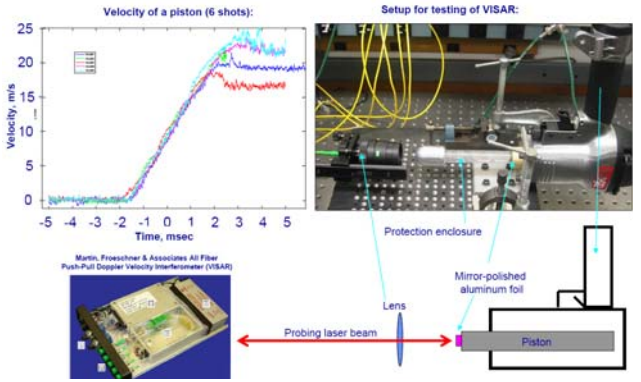

Setup for testing in laser heating experiments

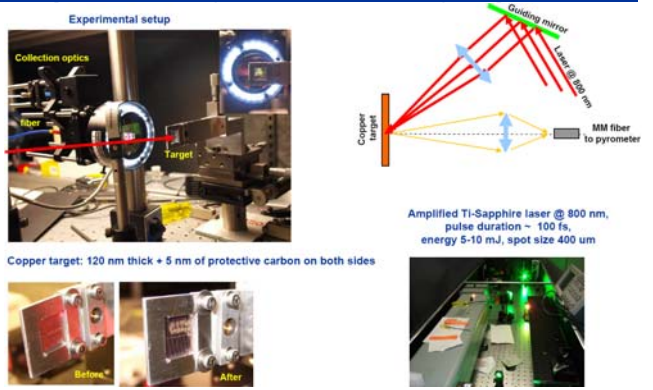

Light collection system

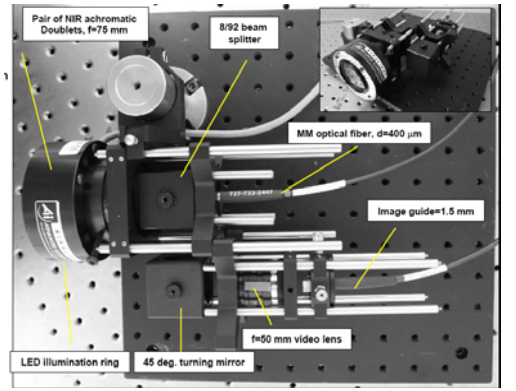

Pyrometer

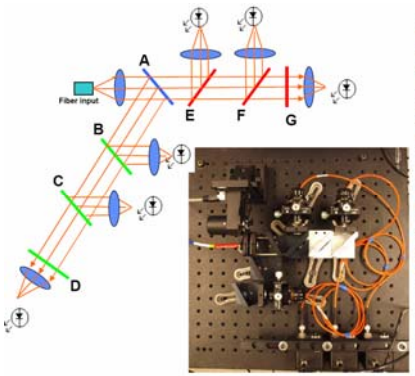

Challenges and requirements:

Being able to detect at least ~1 mW of light from 400 nm to 2000 nm in a sub-ns time scale:

- Ultra fast response (sub-ns)
- Higher sensitivity (>=1500 K)
- Different, more efficient beam splitting mechanism
- No published paper

Technical issues:

- Need low noise amplified photo receiver with flat gain from DC to 4GHz and big active surface.
- Fiber coupling limits the efficiency
- Picoseconds time scale means: Modal (temporal) dispersion in MM fiber, careful cabling, impedance match and termination of detectors

Channel #1: 750 nm+-75 nm, 76 ps rise/fall time detectable level ~2500 K (blackbody)
Channel #2: 1000 nm+-75 nm, 72 ps rise/fall time detectable level ~1500 K (blackbody)
Channel #3: 1400 nm+-75 nm, 70 ps rise/fall time detectable level ~2000 K (blackbody)

Temperature of Cu @ 1000 nm

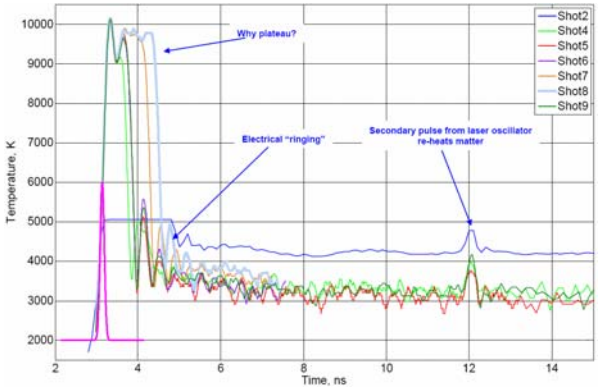

Temperature of Cu @ 1000 nm (long record)

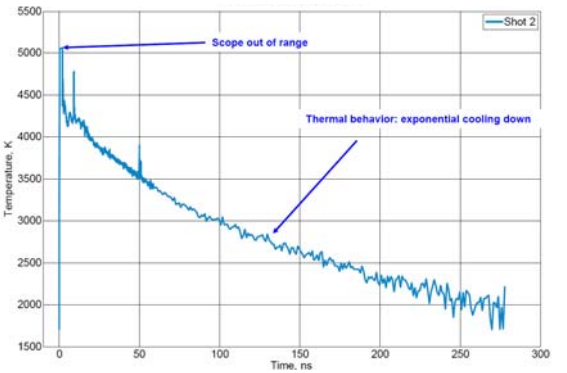

Streak spectrometer

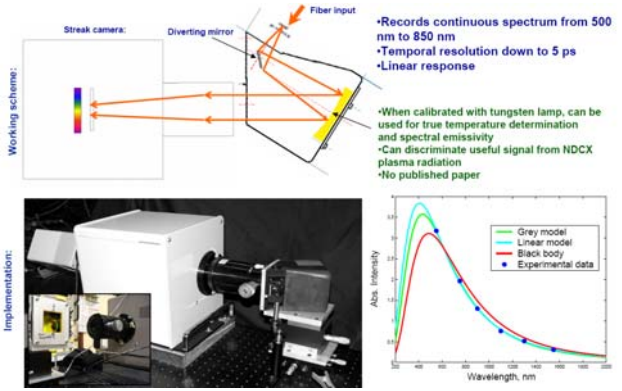

- Records continuous spectrum from 500 nm to 850 nm
- Temporal resolution down to 5 ps
- Linear response

- When calibrated with tungsten lamp, can be used for true temperature determination and spectral emissivity
- Can discriminate useful signal from NDCX plasma radiation
- No published paper

Thermal radiation of Carbon target

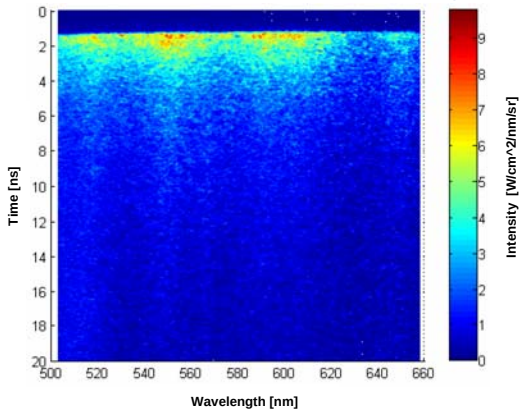
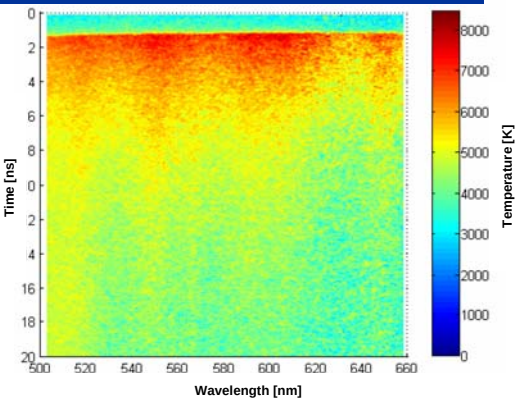
Color temperatures of Carbon target