ET Magnetic Configuration and Equilibrium.

J.-L. Gauvreau, P.-A. Gourdain, M.W. Kissick, L.W. Schmitz and R.J. Taylor,

University of California, Los Angeles, CA, 90024

The UCLA Electric Tokamak is a low field (.25 T) device with large aspect ratio (A ~ 5). The machine is designed to operate with four sets of independent poloidal field coils to provide for OH current drive, vertical equilibrium field, plasma elongation (kappa < 2) and plasma shaping (D or reverse-D). The OH system should provide 10 V-s using a 10 KA power supply. A vertical field of up to .1 T is necessary to provide equilibrium in high beta plasmas. All the coils are located outside the vessel and are constructed from aluminum. The toroidal field coil is completed and is now operated at half field (.12 T). Plasma shots of 1/2 second are obtained using a partial poloidal coil system as construction continues. Machine diagnostics include a Rogowski probe, loop Voltage monitors, Hall probes, visible and UV radiation detectors and CCD cameras. ET equilibria from codes and from initial plasmas will be presented.

Summary of ET construction

- ✓ Vacuum vessel assembled (Aug 98)
- ✓ Pumpdown to 10^{-7} Torr (Sep 98)
- ✓ 64-turn TF coil assembled (Nov 98)
- ✓ 16-turn test-OH coil assembled (Dec 98)
- ✓ 320-turn TF coil assembled (Jun 99)
- ✓ 20-turn VF coil assembled (Oct 99)

- ❑ 40-turn VF coil assembled (Mar 00)
- ❑ 12 kA TF power supply (Mar 00)
- ❑ 180-turn OH coil assembled (Jun 00)
- ❑ Elongation and shaping coils (Jun 00)

Vacuum vessel

- Rectangular cross section
- 1 inch stainless steel plates
- Major radius = 5 m
- Volume = 190 m^3
- Weight = 64 Tons
- 16 sector

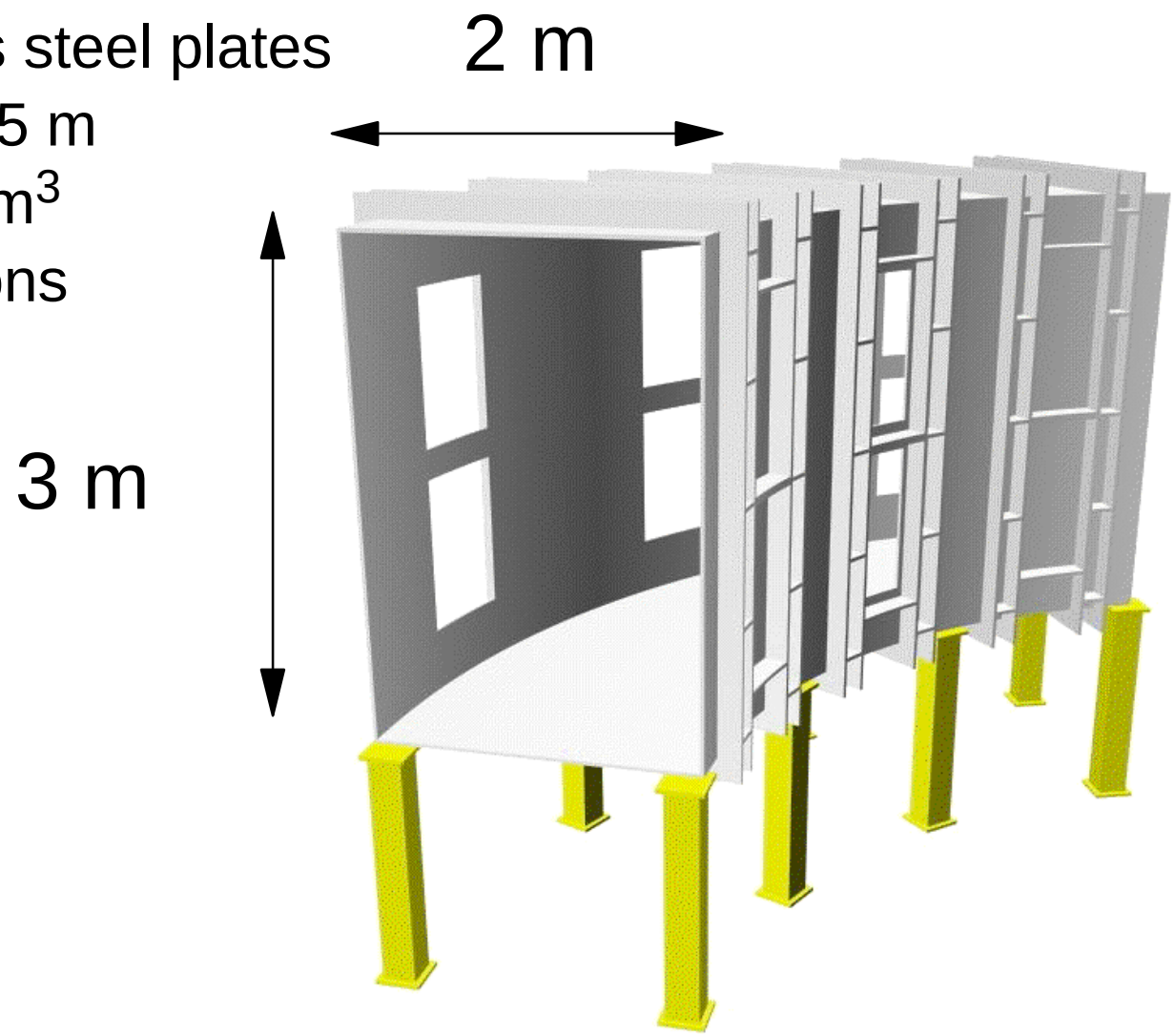

Vacuum System

- 2 SogeVac pumps giving a total of 240 cfm of roughing.
- 4 Turbos of 1 m^3/s each for high vacuum.
- 4 TriVacs of 40 m^3/s each behind the turbos.
- Pumpdown from 760 Torr to 10^{-6} Torr in ~ 6 hours.
- Wall conditionning is done with discharge cleaning and Ti/Cr gettering.

TF Caracteristics

	Feb 00	Nov 00 (nominal 25 C)	futur (cooled 100 K)
N (turns)	320	320	320
L (mH)	62	62	62
R(mΩ)	16	16	3.2
L/R (s)	4	4	20
I_{TF} (KA)	7	20	80
B (T) (R = 5m)	.08	.25	1.0
RI (V)	110	320	250
P (MW)	.8	6.4	20
TF heating (C/min)	.5	4	< 7

ET (Feb 00)

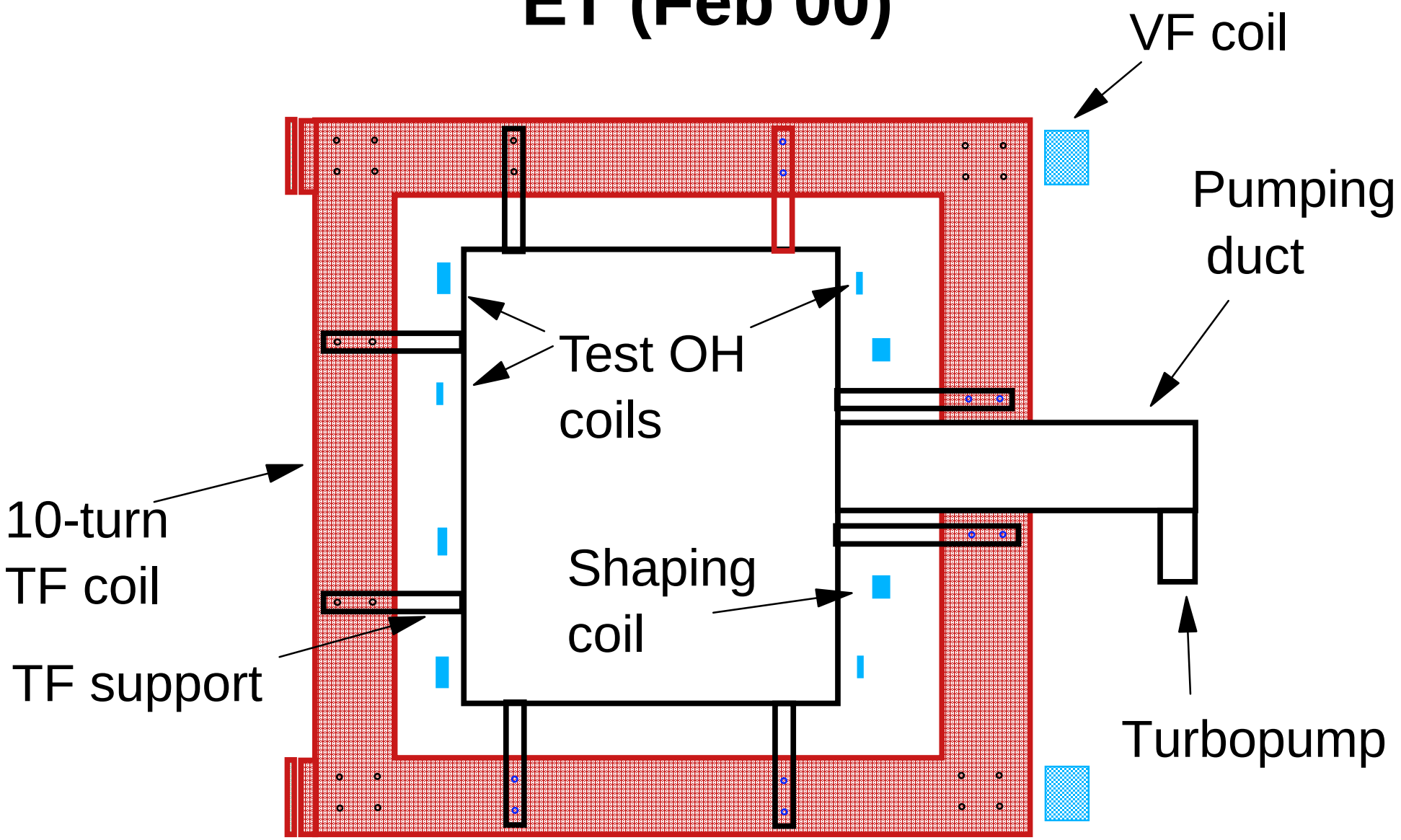
VF coil
Pumping duct
Test OH coils
10-turn TF coil
Shaping coil
TF support
Turbopump

ET (Nov 00)

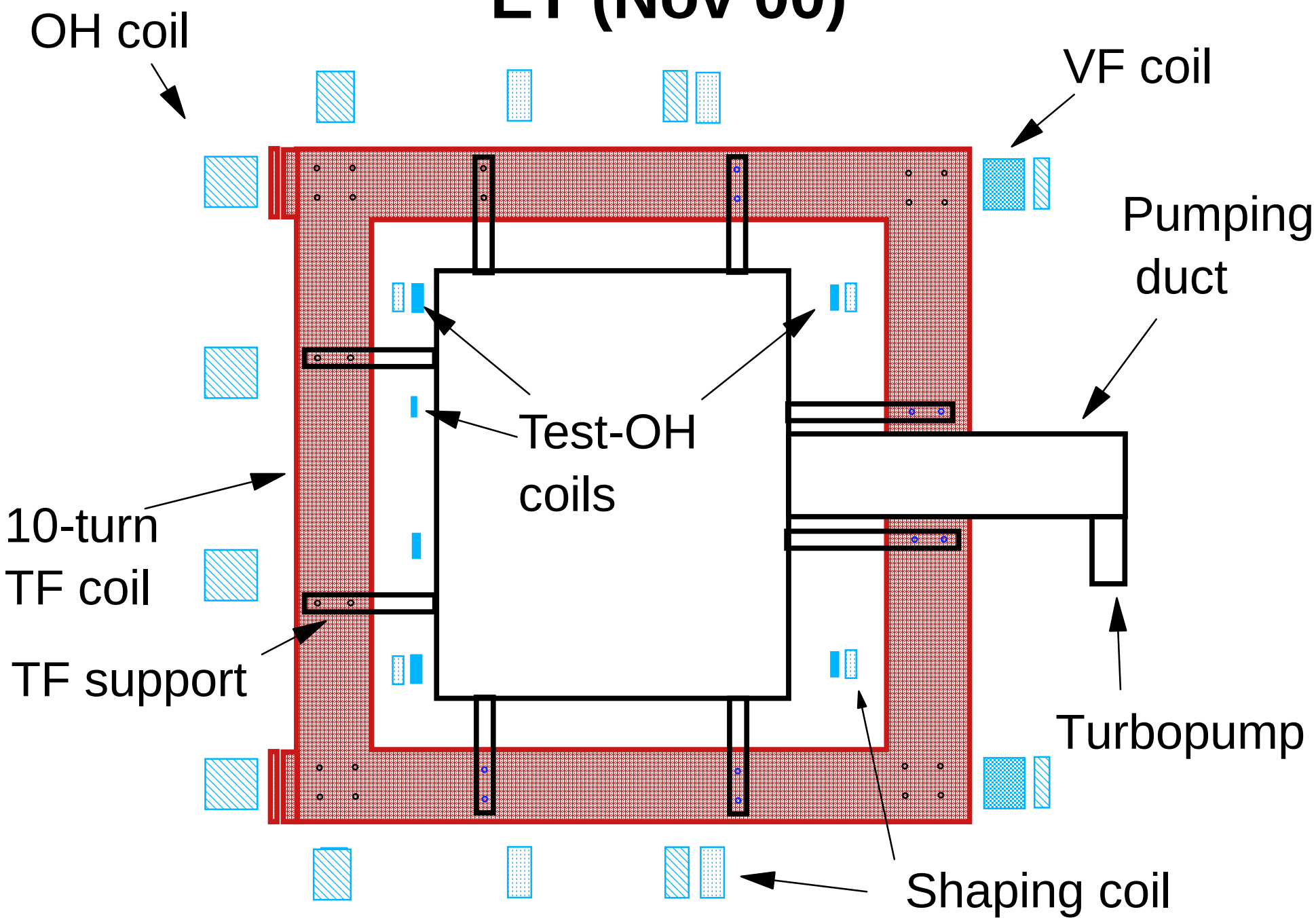
OH coil
VF coil
Pumping duct
Test-OH coils
10-turn TF coil
TF support
Turbopump
Shaping coil

Future PF coils

- OH coils
  - L_{OH} = 87 mH, R_{OH} = 45 mΩ, $M_{OH\text{-}pl}$ = .52 mH
  - Requires a bipolar 10 KA P.S. for 10 V-s.

- Elongation coils to obtain κ = 1.5
- D and reverse-D shaping coils

Power supplies

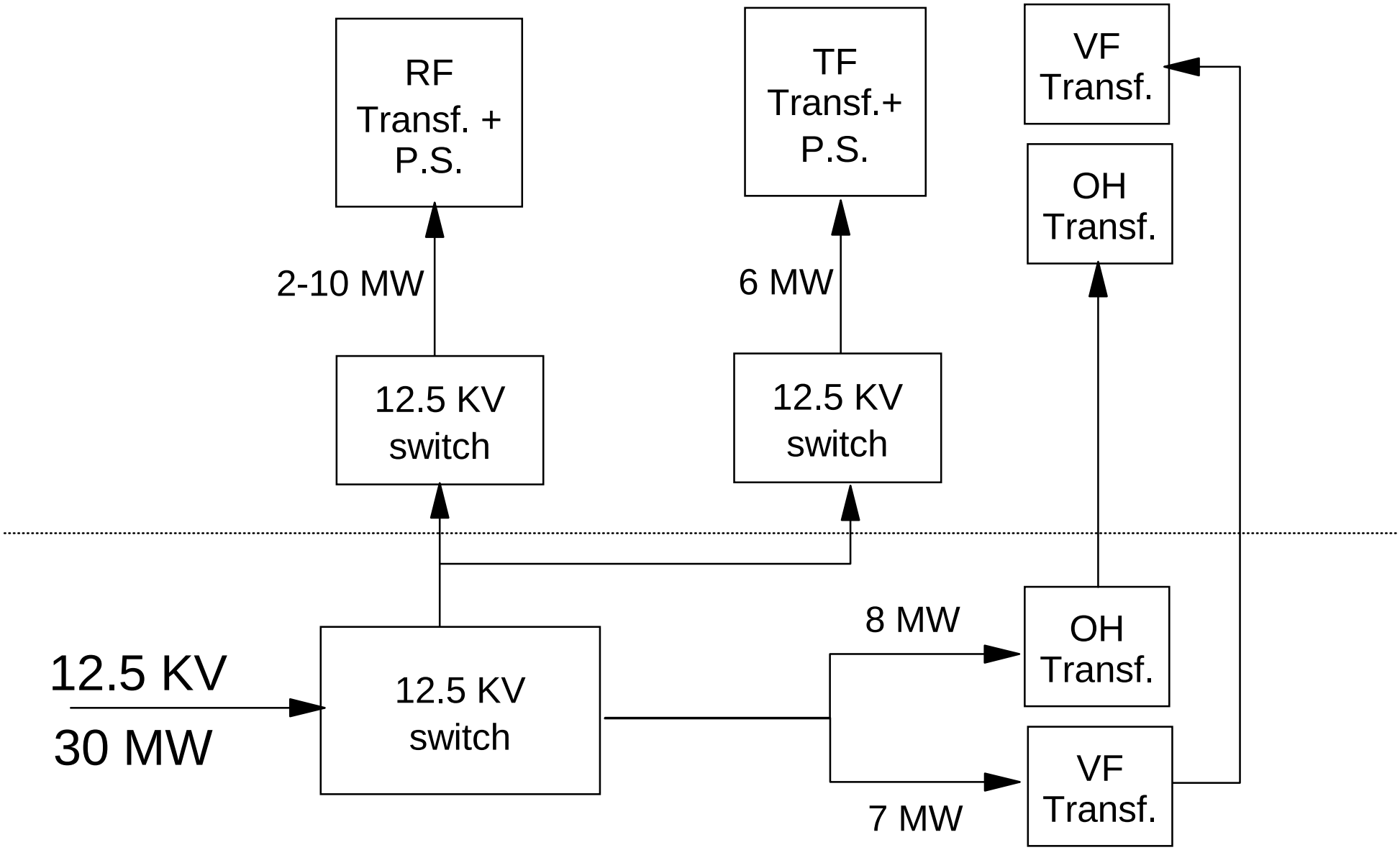

Control Diagnostics

- Magnetic
  - ✓ Rogowsky and loop Voltage coils
  - ✓ Hall probes (plasma position, shape of LCFS)
  - ❑ Mirnov coils (MHD)

- Microwave
  - ✓ Reflectometry [8 - 12 GHz] (n_e, V_{rot}, shape of ψ)
  - ✓ Interferometry [120 GHz] (n_e)

- Particle
  - ✓ Pressure gauges
  - ✓ Langmuir (**E**, T_e, n_e, MHD)
  - ✓ Cameras (plasma position, shape of LCFS)
  - ❑ Cameras (Antennas and wall monitoring)
  - ❑ Charge exchange (T_i)
  - ❑ Spectroscopy (T_e, H_α)
  - ❑ Bolometry
  - ❑ Temperature sensors in walls and near RF windows
  - ❑ Soft-Xray
  - ❑ Particle-beam probe

Plasma parameters

February 00

$R = 5$ m	$A = 5$	$\kappa = 1$
$n_0 \leq 2 \times 10^{18}$ m^{-3}	$I_P = 30$ kA	$B_T = .08$ T
$T_{e0} \leq 140$ eV	$\tau_E = 50 - 150$ ms (1st stab)	
$\beta_0 \leq .025$	$\langle n_e \rangle \leq 2 \times n_{Greenwald}$	$V_{pol} < V_{Mach}$

With RF (future)

$R = 5$ m	$A > 5$	$\kappa < 2$
$n_0 < 1 \times 10^{19}$ m^{-3}	$I_P > 100$ kA	$B_T = .25$ T
$T_{e0} < 2$ kV	$T_{i0} < 3$ kV	$\tau_E = 1 - 5$ s (3rd stab)
$P_{OH} < 200$ kW	$P_{RF} = 2$ MW (cw), 10 MW (pulsed)	
$\langle \beta \rangle \sim 1$	$\langle n_e \rangle > 2 \times n_{Greenwald}$	$V_{pol} > V_{Mach}$

Density Limit

Typical ET parameters:

$I_p = 30$ KA

$B_T = .08$ T

$q_a = 3$

$R = 5$ m

$n_e(0) = 1\text{x}10^{18}$ m^{-3} (L-mode)

$n_e(0) = 2\text{x}10^{19}$ m^{-3} (H-mode)

$n_e(0)_{Greenwald} = 1.2\text{x}10^{18}$ m^{-3}

ET achieves almost twice the Greenwald density Limit

In/Out Light Monitors

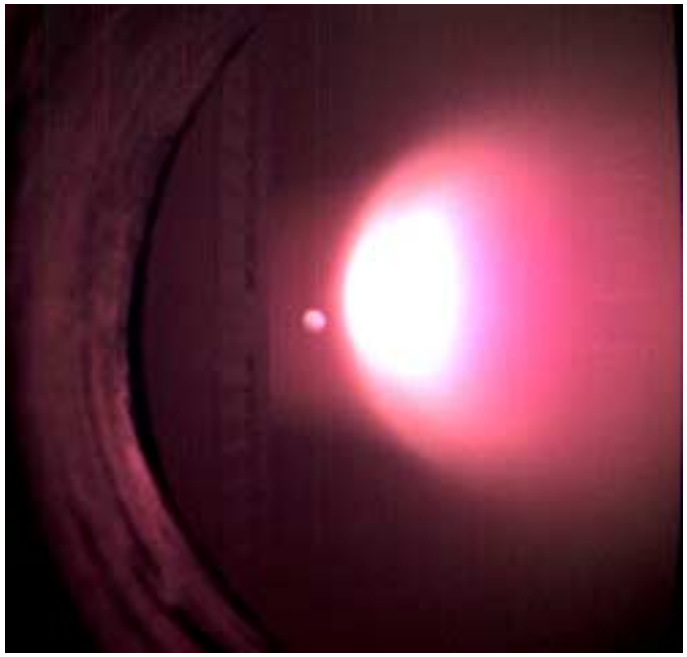

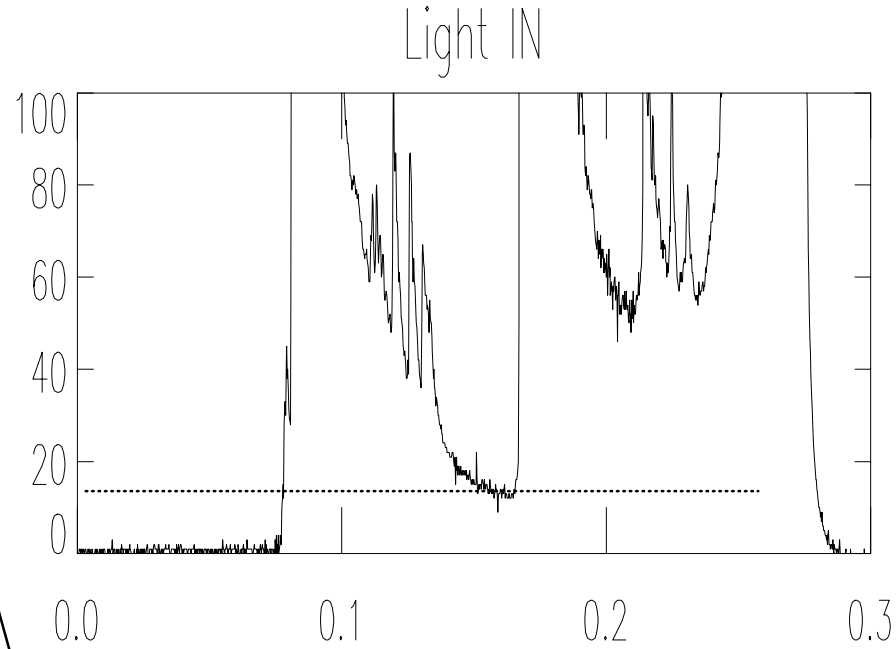

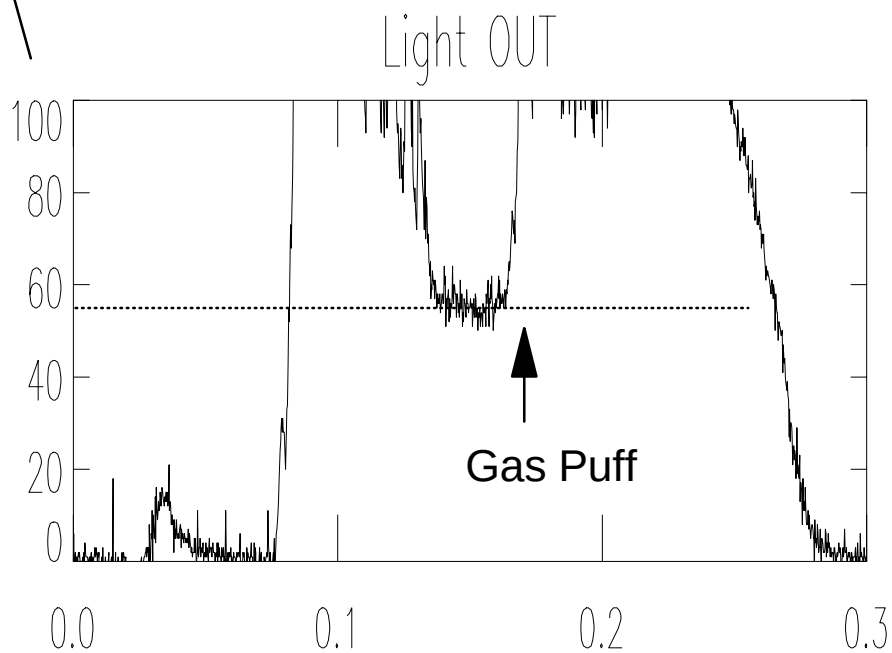

In/Out Light Monitors

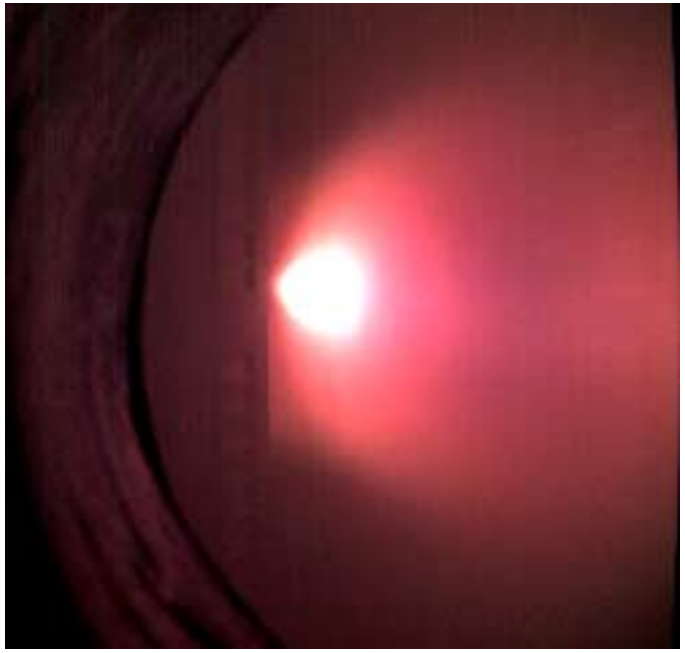

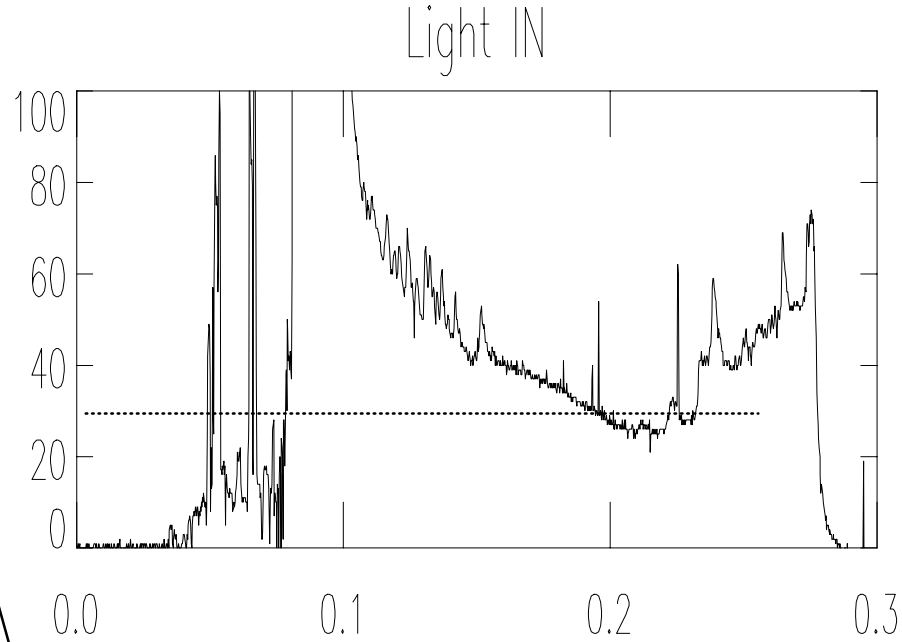

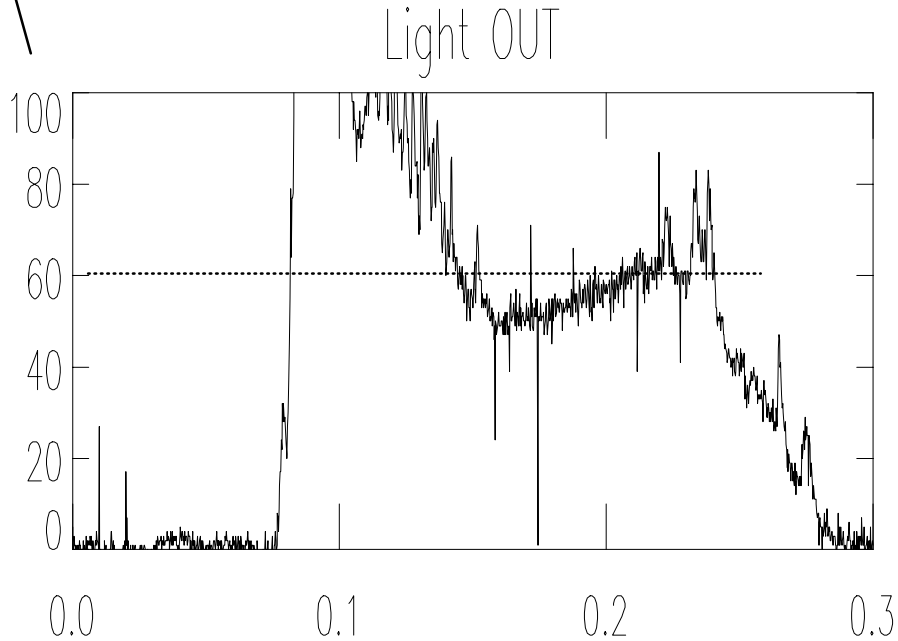

Up/Down Light Monitors

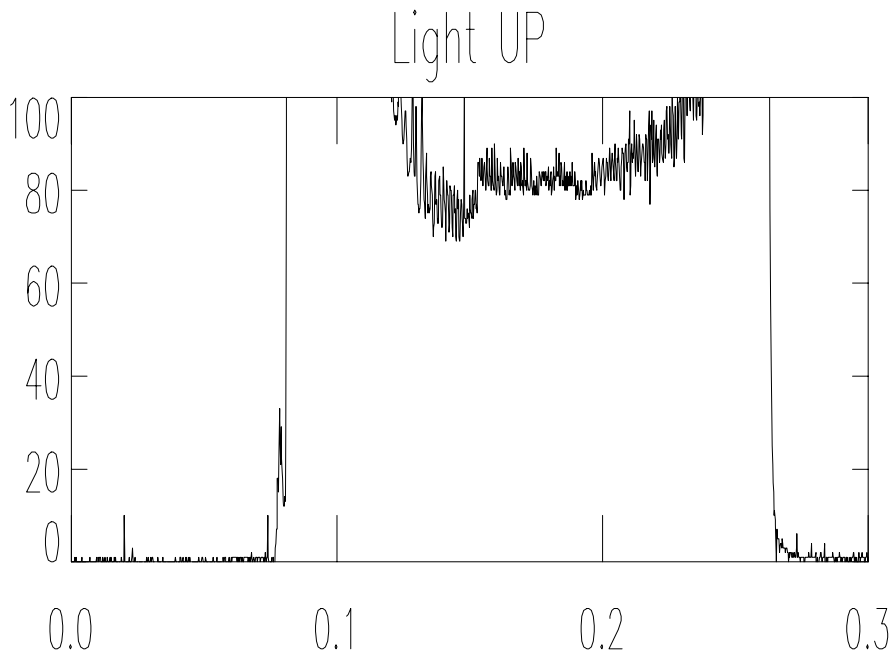

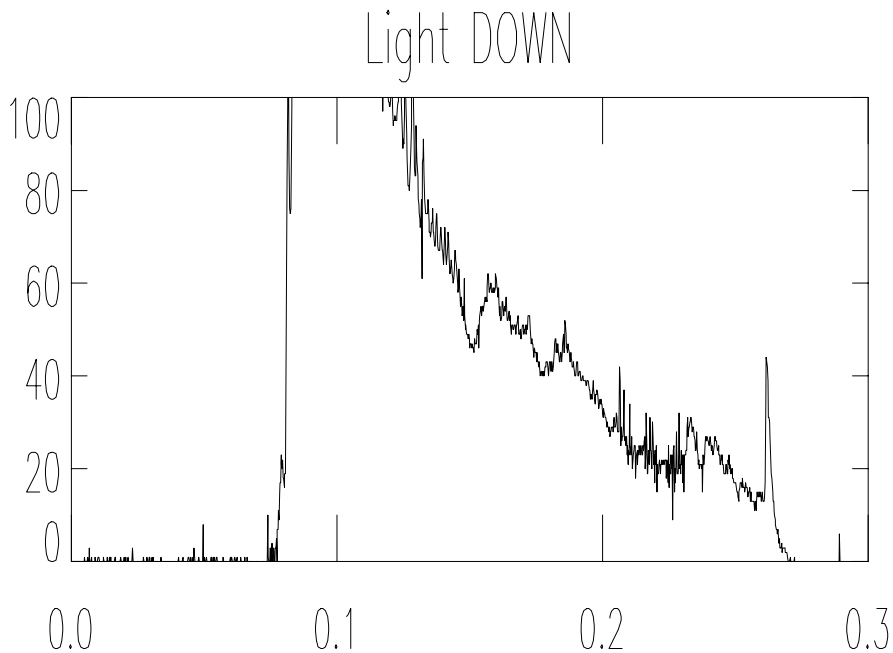

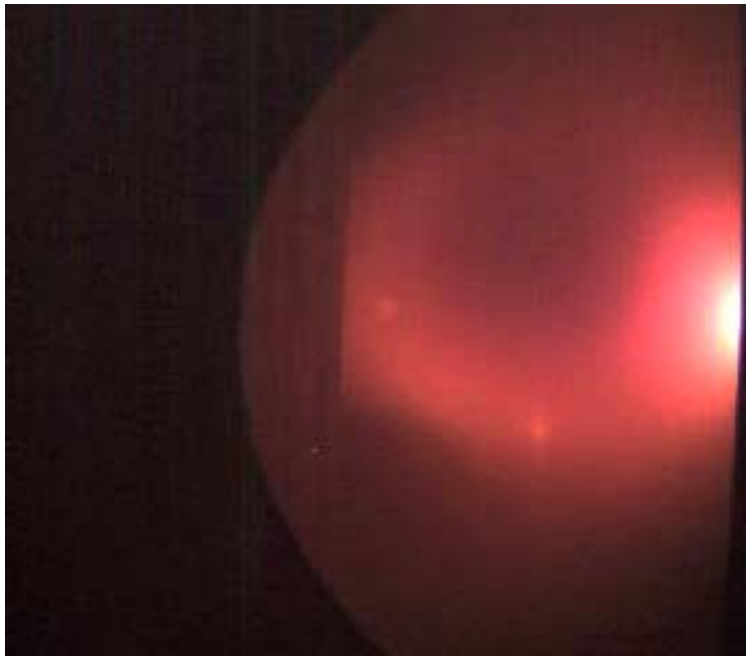

Up/Down Light Monitors

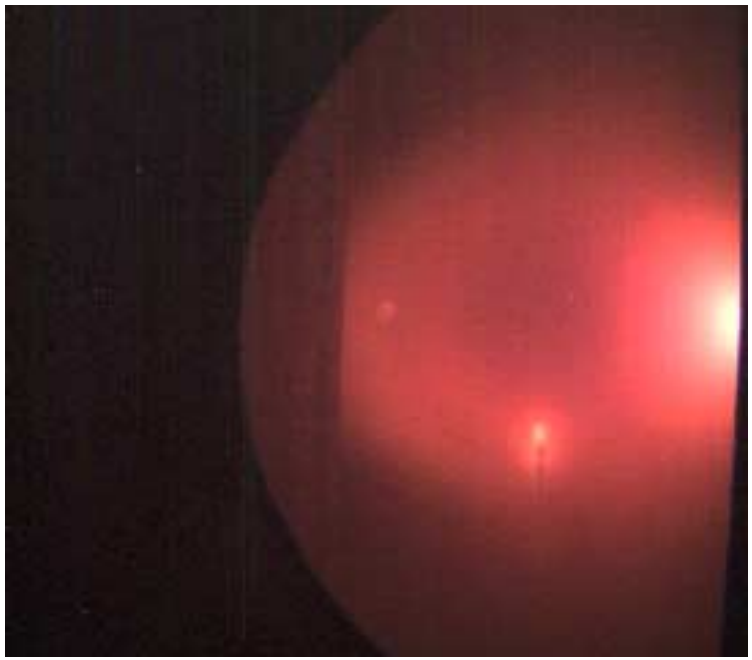

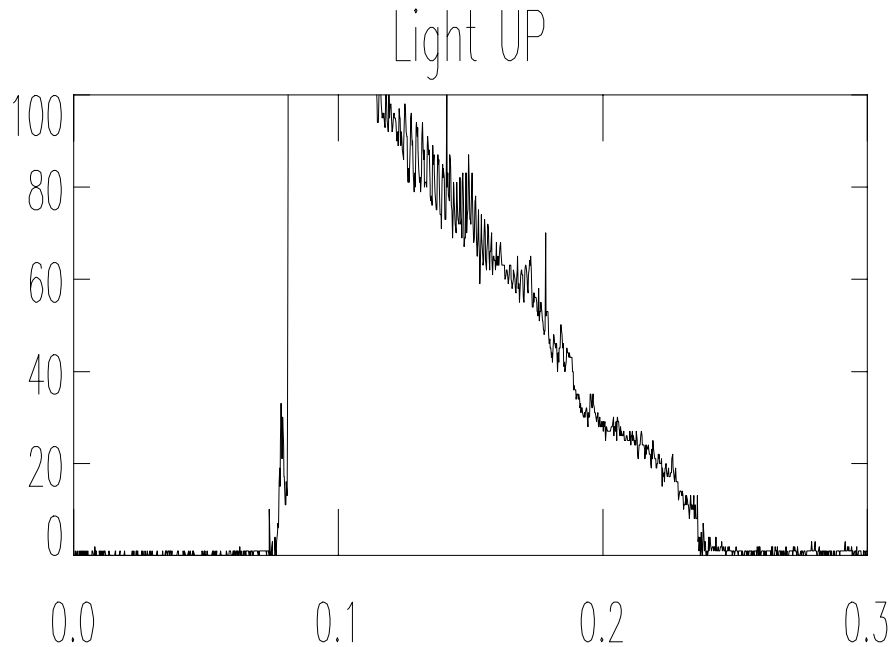

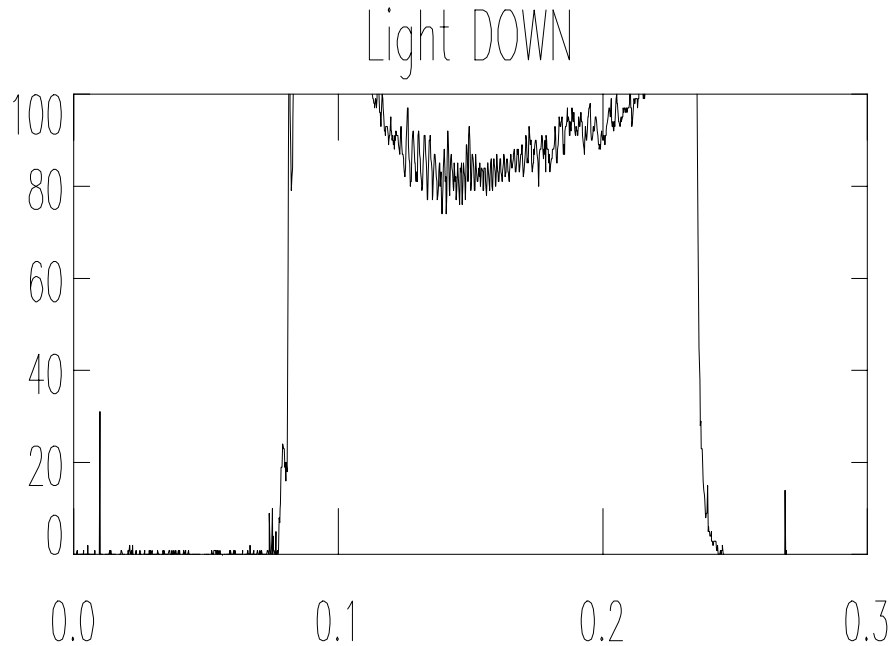

ET Equilibrium for 90% Beta

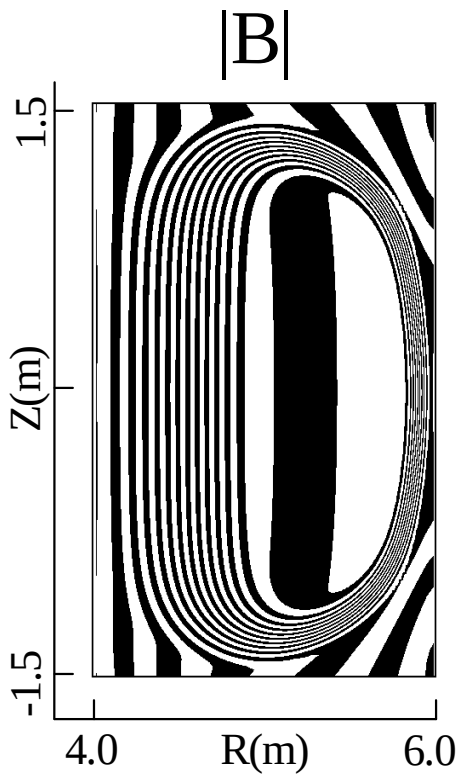

- Wide volume with same |B|
- Omnigeneous core plasma.
- No bananas in core.
- Near classical χ_i
- $\chi_e \sim \chi_i$

- Elongated plasma (k = 1.5)
- Wide magnetic axis.
- Important Shafranov shift.

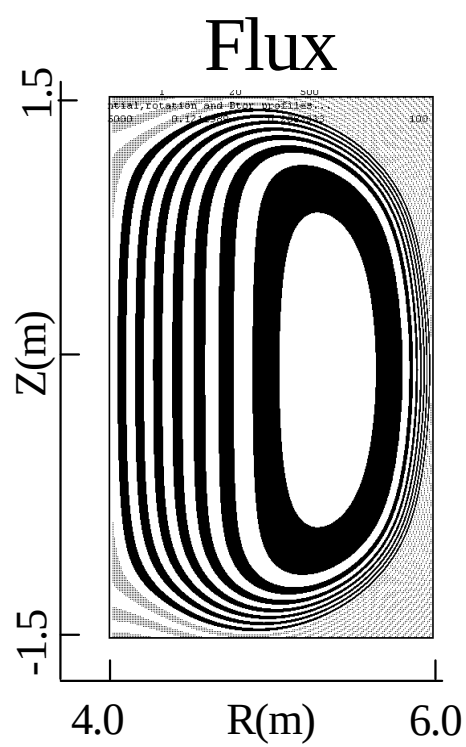

ET Equilibrium for 90% Beta

Current profile

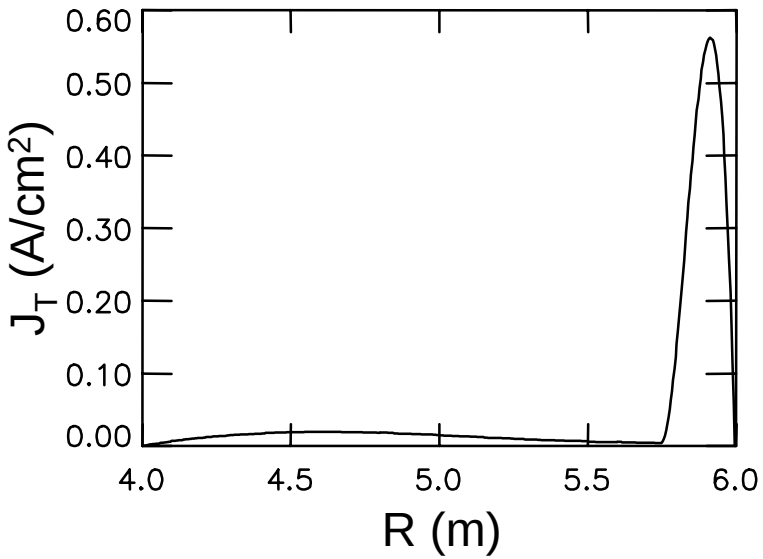

Pressure profile

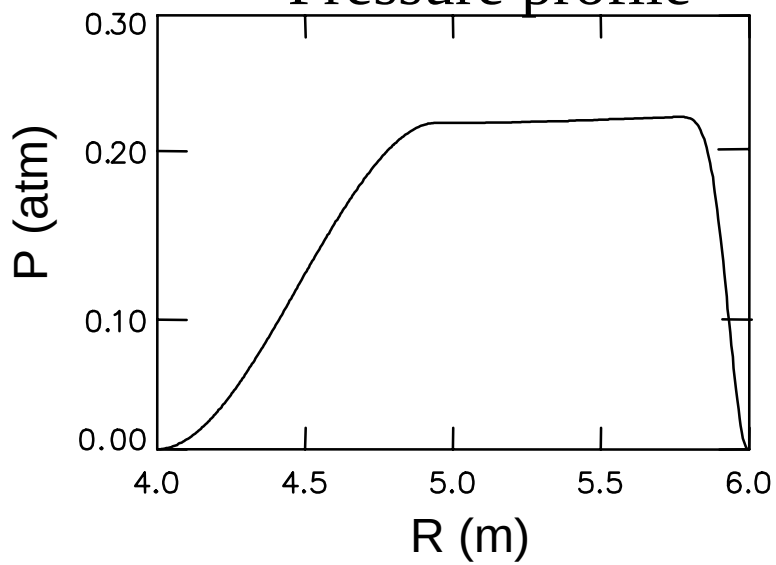

- $T_e \sim 5$ KeV ; $n_e \sim 3 \times 10^{19}$ (m^{-3}) typical
- Diamagnetic core plasma
- The current profile is pressure-driven (JxB ~ ∇P).
- Ohmic power contributes to less than 25% heating.