Stability of Virtual Cathodes for the Periodically Oscillating Plasma Sphere

R. A. Nebel, J. M. Finn
Los Alamos National Laboratory
Los Alamos, New Mexico 87545

Outline

I. Motivation

II. Review of POPS physics

III. Equilibrium and Stability of Virtual Cathodes

IV. Proposed Experiment

V. Conclusions

Why IEC?

* **Massively Modular Penning Trap Reactor**

Penning Trap Reactor Vessel

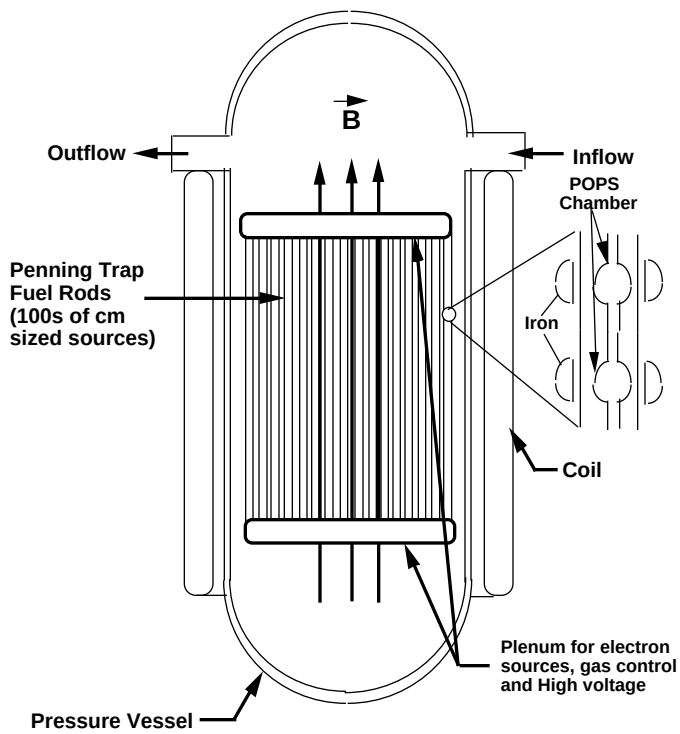

* **Mass Power Density for Modular Reactors is a paradigm shift from conventional systems[1].**

$$\text{MPD} = \frac{2\,\pi\,\eta\,P_{wall}}{\rho}\;\frac{a^2}{a\,(2\,a\,t + t^2)}\;\frac{F\,a}{r_{tube}}$$

* **High MPD (~ LWR) can be achieved with conventional wall loads.**

* **Why can we do this with IECs?**

  - **Confinement doesn't depend on size**
  - **Power out ~ $1/r_{tube}$**

1. **see R. A. Nebel, contributed paper, Snowmass (1999).**

POPS Ion Physics[2,3]

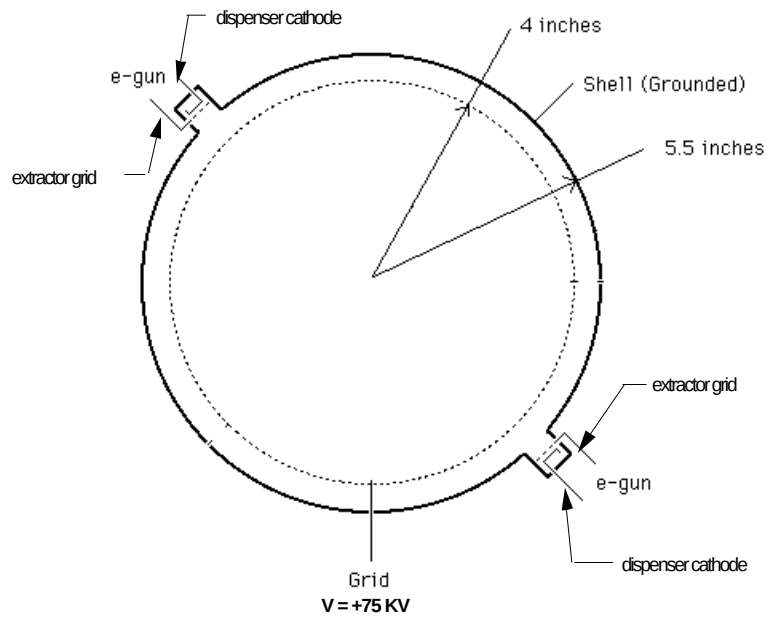

1. **1-D Time and space separable solutions exist.**

2. **Solutions are stable.**

3. **Stable spectrum is a continuum suggesting Landau damping.**

4. **Density profile is Gaussian in radius, Maxwellian in velocity.**

5. **Profiles remain in l.t.e. throughout oscillation.**

6. **Solutions should be attractors.**

2. D. C. Barnes, R. A. Nebel, ***Physics of Plasmas*** **5**, 2498 (1998).
3. R. A. Nebel, D. C. Barnes, ***Fusion Technology*** **38**, 28 (1998).

Virtual Cathode Equilibrium and Stability

Equilibrium

Pressure balance and Poisson's equation lead to

$$\phi_{0eff}(r) = \phi_{00eff}(1 - (r/a)^2)$$

where

$$\phi_{00eff} = -e(n_0-n_b)a^2/(6\varepsilon_0)$$

and

$$p_0(r) = p_{00} + en_0(\phi_{0eff}(r) - \phi_{00eff})$$

Stability

Energy principle leads to sufficient condition for stability

$$ds/d\phi_{0eff} < 0. \text{ (Rayleigh-Taylor criterion)}$$

where $s=p/(m_e n)^\gamma$ is the entropy density. But for constant density

$$ds/d\phi_{0eff} = (dp/dr)/(d\phi_{0eff}/dr) = en_0 > 0$$

which is always violated everywhere in the plasma.

Dimensionless Linear Eigenvalue Equations

$$\phi'' + 2/x\phi' - l(l+1)/x^2\phi = 6n$$

$$(-\Omega^2 + \Omega_{eff}^2 + 1)n - (\lambda_D/a)^2[p'' + 2/x\, p' - l(l+1)/x^2\, p] + (\Omega_{eff}^2 x/3)n' = 0$$

$$-\Omega^2(\lambda_D/a)^2 p + \Omega_{eff}^2 x/3[-(\lambda_D/a)^2 p' + \phi'/6 + (\Omega_{eff}^2 x/3)n] + \Gamma[(\lambda_D/a)^2 + \Omega_{eff}^2 x^2/6]\Omega^2 n = 0$$

where $\omega_{pe}^2 \equiv e^2 n_0/(\varepsilon_0 m_e)$, $\omega_{eff}^2 \equiv \omega_{pe}^2 - e^2 n_b/(\varepsilon_0 m_e)$, $\Omega^2 \equiv \omega^2/\omega_{pe}^2$, $\Omega_{eff}^2 \equiv \omega_{eff}^2/\omega_{pe}^2$, $\lambda_D \equiv [\varepsilon_0 k_B T_{00}/(n_0 e^2)]^{1/2}$, $x \equiv r/a$, $p \equiv \delta p/p_{00}$, $n \equiv \delta n/n_0$, $\phi \equiv -\delta\varphi/\varphi_{00}$.

The equations form a fourth order, self-adjoint system of equations. The only dependences are on λ_D/a, ω_{eff}^2, Γ, and ω_{pe}^2.

Growth Rates

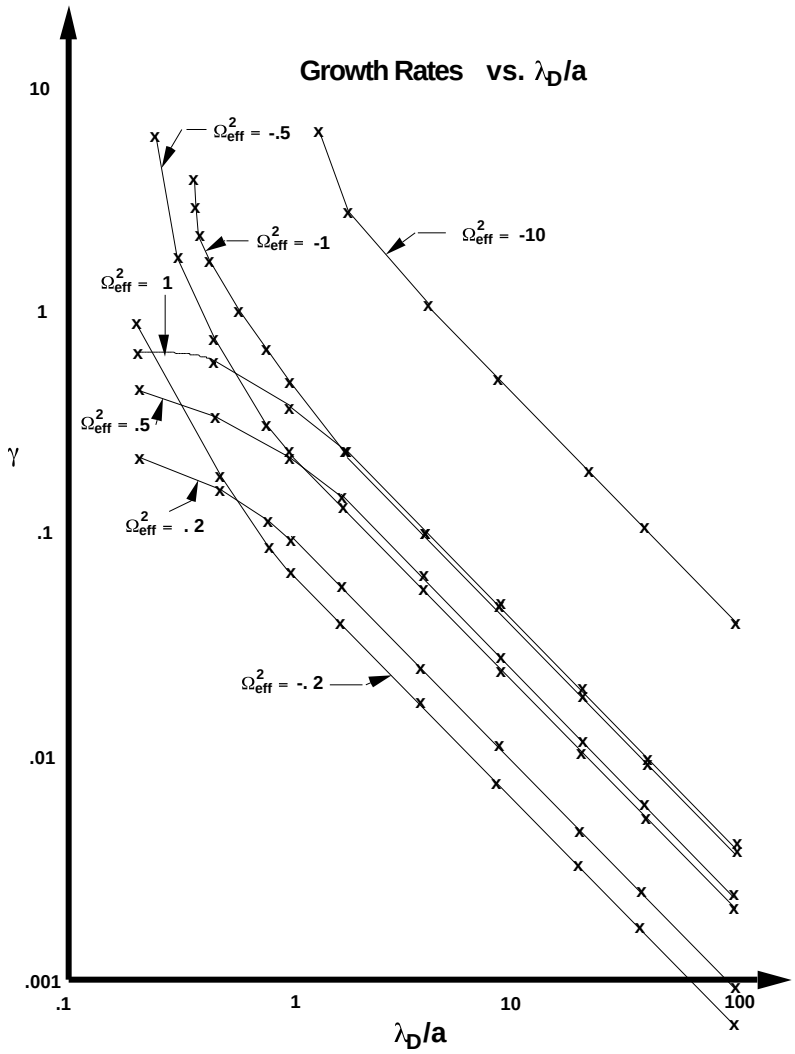

Growth rate versus λ_D/a for various values of Ω_{eff}^2.

* **No window of absolute stability**

* **Marginal points at Brillouin limit and λ_D/a _ infinity.**

* **$\gamma \sim 1 / (\lambda_D/a)$ for large λ_D/a (incompressible Rayleigh-Taylor limit).**

Stable Virtual Cathodes

Do stable profiles exist that are sufficiently close to the desired harmonic oscillator potential that the POPS scheme will work?

Combine the marginally stable compressible Rayleigh-Taylor profile:

$$d(p/n^{\Gamma})/dr = 0$$

with pressure balance and Poisson's equation and write in dimensionless form:

$$\nu'' + 2/x\nu' + [(\Gamma-2)/\nu](\nu')^2 - \Gamma/(\lambda_D/a)^2\nu^{(2-\Gamma)}(\nu - \nu_b) = 0$$

where $\nu \equiv n/n_{or}$ **and** $\nu_b \equiv n_b/n_{or}$.

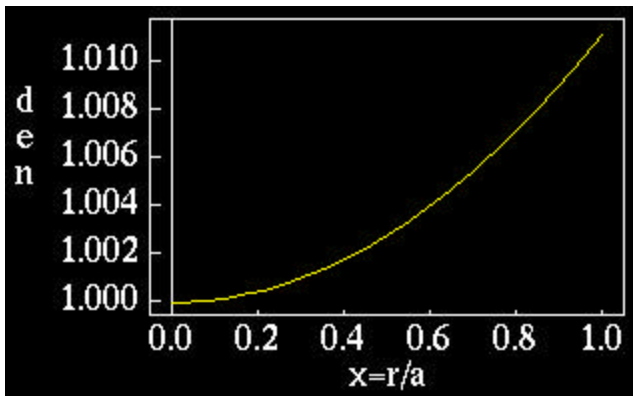

Density vs. radius for marginally stable profiles for $\lambda_D/a = 5$.

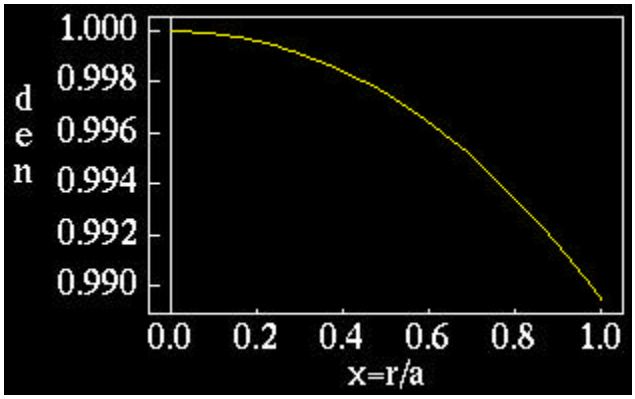

Density vs. radius for marginally stable profiles for $n_b/n_{or} = .965$

* **Stable profiles exist that are sufficiently close[3] (~1%) to the desired profiles for** $\lambda_D/a > 5$ **or** $1 > n_b/n_{or} > .965$.

3. R. A. Nebel, D. C. Barnes, ***Fusion Technology*** **38**, 28 (1998).

Kinetic Effects

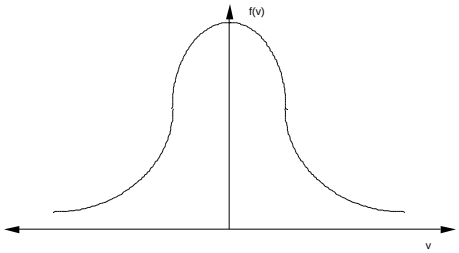

→

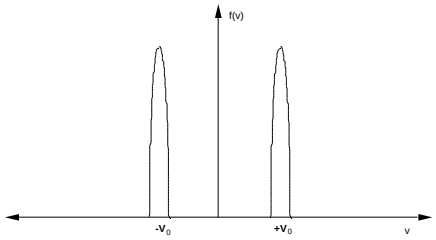

Compressible Rayleigh-Taylor → **Electron-Electron Two-Stream**

* Approximations

- **Cold beam**
- **Slab geometry**

* Dispersion relation

$$1 = \omega_{pe}^2[1/(\omega + kV_0)^2 + 1/(\omega - kV_0)^2]$$

* Marginal Limit

$$\omega_{pe}^2 = k^2V_0^2/2$$

or

$$(\lambda_{Deff}/a)^2 = 1$$

where

$$\lambda_{Deff} \equiv [\varepsilon_0 k_B V_0^2/(2n_0e^2)]^{1/2}$$

* Conclusion:

$1 \leq (\lambda_{Deff}/a)_{crit}$ **for two-stream stability**

* Does a critical value for λ_{Deff}/a exist?

Experimental Comparison

Temperature Scaling

$$T_e \sim V_0^2 \sim \phi_{grid}$$

Density Scaling

$$n \sim J/V_0 \sim I/(V_0 a^2).$$

$(\lambda_{Deff}/a)_{crit}$ Scaling

$$(\lambda_{Deff}/a)_{crit}^2 \sim T_e/(na^2) \sim T_e V_0/I \sim \phi_{grid}^{3/2}/I.$$

I_{crit} Scaling

$$I_{crit} \sim \phi_{grid}^{3/2}/(\lambda_{Deff}/a)_{crit}^2.$$

This scaling was observed on two experiments[4,5].

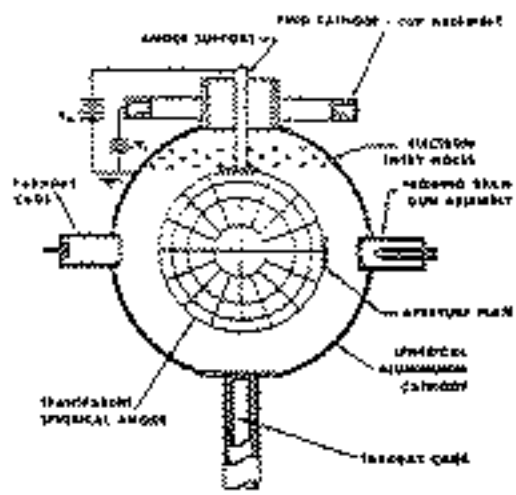

FIG. 2. Arrangement of the experimental apparatus.

Both instabilities should result in fluctuations ~ ω_{pe}

$$\omega_{fluc} \sim \omega_{pe} \sim n^{1/2} \sim [I/(V_0 a^2)]^{1/2} \sim \{[\phi_{grid}^{3/2}/(\lambda_{Deff}/a)_{crit}^2]/\ \phi_{grid}^{1/2}\}^{1/2} \sim \phi_{grid}^{1/2}$$

This scaling was also observed at the onset of the fluctuations[4].

4. R. L. Hirsch, ***Physics of Fluids*** **11**, 2486 (1968).
5. D. A. Swanson, B. E. Cherrington, J. T. Verdeyen, ***Physics of Fluids*** **16**, 1939 (1973).

$(\lambda_{Deff}/a)_{crit}$

Fluid results (thermal electron distribution):

Stable virtual cathodes exist which are "close enough" to the desired harmonic oscillator potential if:

$$5 < \lambda_{Deff}/a.$$

Kinetic results (self-colliding beam distribution):

Stable virtual cathodes exist if:

$$1 < \lambda_{Deff}/a.$$

Experimental Results:

Scalings are consistent with the existence of a critical limit in λ_{Deff}/a.

Why is $(\lambda_{Deff}/a)_{crit}$ important?

$|\phi_{applied}| \sim (\lambda_{Deff}/a)_{crit}^{2}$

$P_{cyc} \sim (\lambda_{Deff}/a)_{crit}^{4}$ **(for Penning Trap only)**

* **A factor of 5 uncertainty in $(\lambda_{Deff}/a)_{crit}$ translates to a factor of ~ 25 uncertainty in applied voltage and a factor of ~ 625 uncertainty in Cyclotron radiation.**

* **This issue can determine if gridded systems or Penning Traps are the best way to pursue POPS.**

* **We propose to determine $(\lambda_{Deff}/a)_{crit}$ experimentally.**

Experimental Program

* **Phase I: Equilibrium and Stability of Virtual Cathodes.**

INS Device

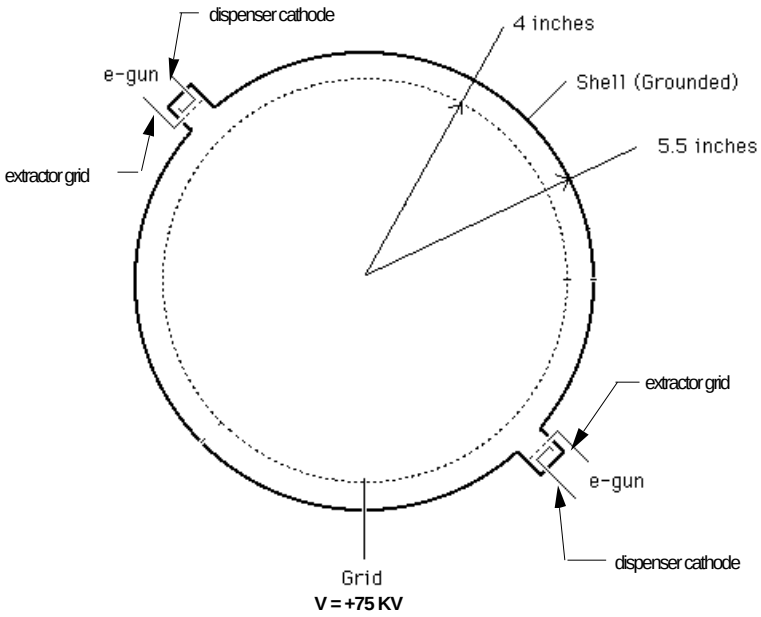

INS Device Configured for Virtual Cathode and POPS

INS Experiment

* **Check scalings observed in previous experiments but over a much larger parameter space. (first year!)**

* **Make detailed profile measurements. (second year)**

  - **High-voltage probes[6]**

  - **Electron beam probe**

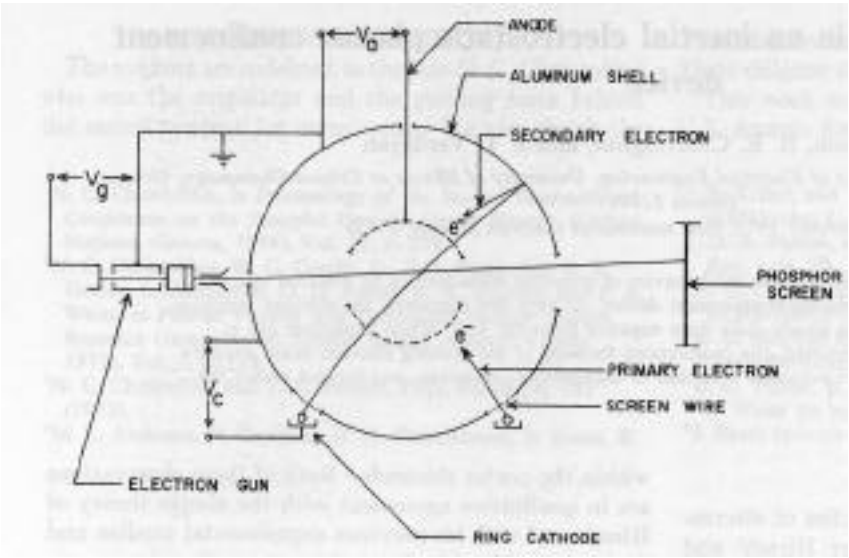

Electron beam probe of Swanson et al[5]

* **Phase II: Test phase locking with POPS (ion) operation.**

  - **Can we make the oscillating ion cloud?**

  - **What are the operating parameters and how do they scale?**

  - **Neutrons?**

  - **Test pondermotive pumping and pondermotive dumping.**

5. D. A. Swanson, B. E. Cherrington, J. T. Verdeyen, ***Physics of Fluids* 16**, 1939 (1973).
6. T. A. Thorson, R. D. Durst, R. J. Fonck, L. P. Wainwright, ***Physics of Plasmas* 4**, 4 (1997).

Conclusions

* **POPS virtual cathodes violate a compressible Rayleigh-Taylor stability criterion for electrons.**

* **Growth rates fall at large λ_{Deff}/a and near Brillouin limit, but no window of absolute stability exists in the fluid model.**

* **Stable profiles that are "close enough" exist for $\lambda_{Deff}/a \geq 5$ and for profiles within 3.5 % of Brillouin limit.**

* **Kinetic 2 stream limit suggests that a critical value of λ_{Deff}/a for stability exists and that this value is ~ 1.**

* **Since $\phi_{applied} \sim (\lambda_{Deff}/a)_{crit}^{2}$ and $P_{cyc} \sim (\lambda_{Deff}/a)_{crit}^{4}$ determining $(\lambda_{Deff}/a)_{crit}$ is critical to POPS performance and may serve as the basis of choosing between gridded and Penning Trap systems.**

* **We propose to determine these limits experimentally**

  - **Repeat experiments of Hirsch[4] and Swanson et al[5] over a wide parameter space.**

  - **Make profile measurements.**

  - **Introduce ions and study ion phase locking with POPS operation.**

  - **Look for neutrons.**

4. R. L. Hirsch, ***Physics of Fluids*** **11**, 2486 (1968).
5. D. A. Swanson, B. E. Cherrington, J. T. Verdeyen, ***Physics of Fluids*** **16**, 1939 (1973).